Politeknik Elektronika Negeri Surabaya

# Routing Dinamis

Oleh:

Idris Winarno

# Definisi

- Routing dinamis adalah routing yang dilakukan oleh router dengan cara **membuat jalur komunikasi data secara otomatis** sesuai dengan pengaturan yang dibuat.
- Routing dinamis ini berada pada **lapisan network** layer jaringan komputer dalam TCP/IP Protocol Suites.
- Protokol routing:
  - RIP
  - OSPF
  - BGP
  - EIGRP (only Cisco dev.)

**https://dosenit.com/jaringan-komputer/teknologi-jaringan/routing-dinamis*

# Tentang Quagga

- Quagga adalah sebuah software aplikasi yang digunakan untuk aplikasi routing protocol.

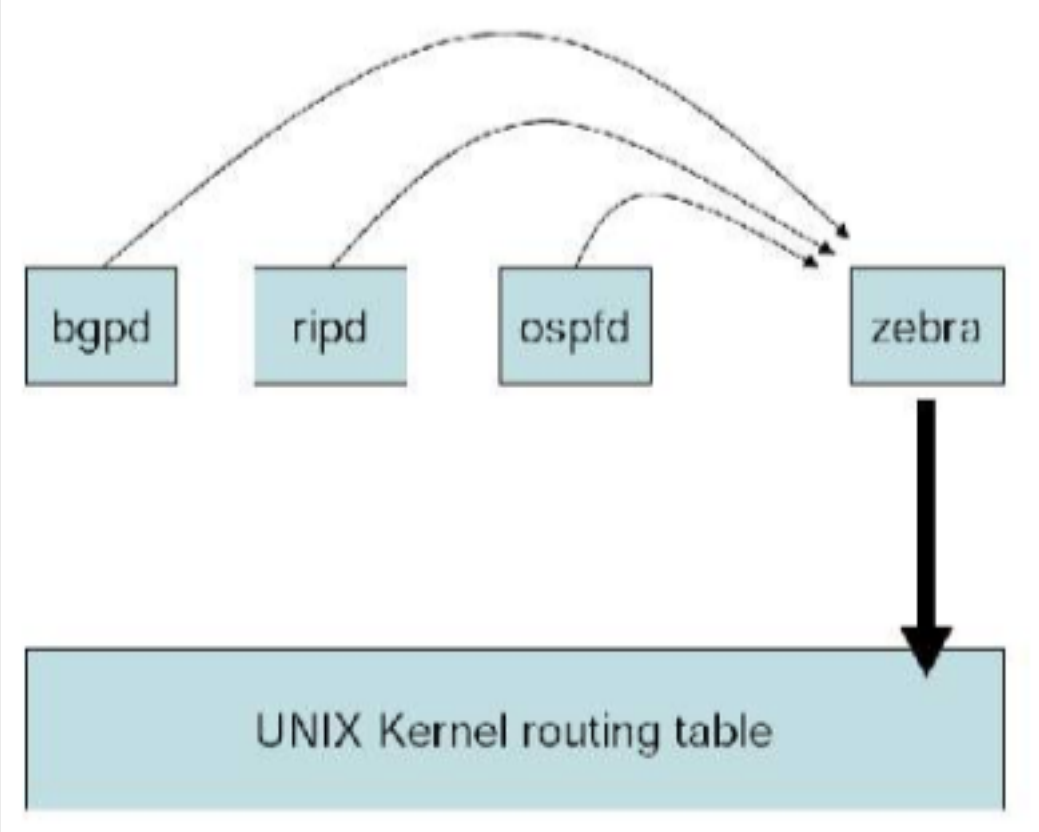

# Topologi Praktikum

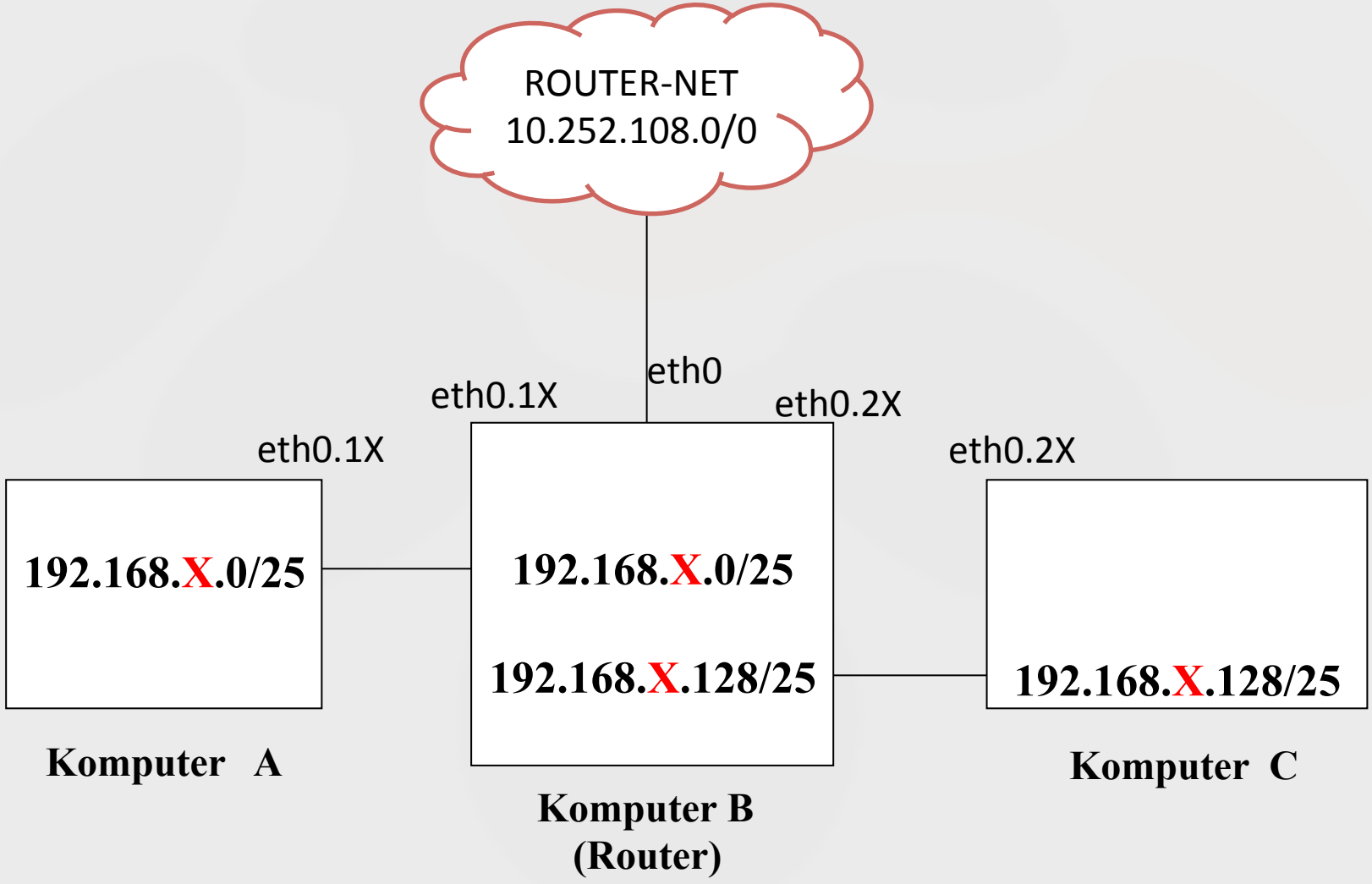

# Komputer *Client*

Komputer A:

- # apt-get install vlan
- # vconfig add eth0 1X
- # ifconfig eth0.1X 192.168.X.10/25
- # route add default gw 192.168.X.1

Komputer C:

- # apt-get install vlan
- # vconfig add eth0 2X
- # ifconfig eth0.1X 192.168.X.130/25
- # route add default gw 192.168.X.129

# Komputer B (Router)

Installasi paket:

- # apt-get install vlan
- # sysctl -w net.ipv4.ip_forward=1
- # apt-get install quagga quagga-doc

Konfigurasi IP:

- # vconfig add eth0 1X
- # vconfig add eth0 2X
- # ifconfig eth0.1X 192.168.X.1/25
- # ifconfig eth0.2X 192.168.X.129/25

Ujicoba PING: dari komputer A ke C (dan sebaliknya)

# Komputer B (Router)

Konfigurasi Quagga:

- Edit file /etc/quagga/daemons
  - zebra=yes
  - ospfd=yes

```
zebra=yes
bgpd=no
ospfd=yes
ospf6d=no
ripd=no
ripngd=no
isisd=no
babeld=no
```

- # cp /usr/share/doc/quagga/examples/ospfd.conf.sample /etc/quagga/ospfd.conf
- # cp /usr/share/doc/quagga/examples/zebra.conf.sample /etc/quagga/zebra.conf
- # chown quagga:quagga /etc/quagga/*

```
root@debian:/etc/quagga# ls -l
total 16
-rw-r----- 1 quagga quagga 992 Oct 25 08:59 daemons
-rw-r----- 1 quagga quagga 945 Feb 14  2018 debian.conf
-rw-r----- 1 quagga quagga 205 Oct 25 09:22 ospfd.conf
-rw-r--r-- 1 root   root   385 Oct 25 09:41 zebra.conf
root@debian:/etc/quagga#
```

# Komputer B (Router)

Jalankan quagga:

- # /etc/init.d/quagga restart
- # netstat -npltu

```
root@debian:/etc/quagga# netstat -npltu
Active Internet connections (only servers)
Proto Recv-Q Send-Q Local Address           Foreign Address         State       PID/Program name
tcp        0      0 127.0.0.1:2604          0.0.0.0:*               LISTEN      1832/ospfd
tcp        0      0 0.0.0.0:22              0.0.0.0:*               LISTEN      410/sshd
tcp        0      0 127.0.0.1:2601          0.0.0.0:*               LISTEN      1828/zebra
tcp6       0      0 :::22                   :::*                    LISTEN      410/sshd
udp        0      0 0.0.0.0:68              0.0.0.0:*                           363/dhclient
udp        0      0 0.0.0.0:30974           0.0.0.0:*                           363/dhclient
udp6       0      0 :::25517                :::*                                363/dhclient
```

# Komputer B (Router)

Konfigurasi quagga:

- # telnet localhost 2604 ← password: zebra

Atau

- # telnet localhost ospfd ← password: zebra

```
root@debian:/etc/quagga# telnet localhost ospfd
Trying ::1...
Trying 127.0.0.1...
Connected to localhost.
Escape character is '^]'.

Hello, this is Quagga (version 0.99.23.1).
Copyright 1996-2005 Kunihiro Ishiguro, et al.


User Access Verification

Password:
ospfd> en
ospfd# show run

Current configuration:
!
hostname ospfd
password zebra
log stdout
!
!
line vty
!
end
ospfd#
```

# Komputer B (Router)

- Konfigurasi OSPF:

```
root@debian:/etc/quagga# telnet localhost ospfd
Trying ::1...
Trying 127.0.0.1...
Connected to localhost.
Escape character is '^]'.

Hello, this is Quagga (version 0.99.23.1).
Copyright 1996-2005 Kunihiro Ishiguro, et al.


User Access Verification

Password:
ospfd> enable
ospfd# configure terminal
ospfd(config)# router ospf
ospfd(config-router)# network 10.252.108.0/0 area 0
ospfd(config-router)# network 192.168.2.0/24 area 0
ospfd(config-router)# no network 10.252.108.0/0 area 0
ospfd(config-router)# network 10.252.108.0/24 area 0
ospfd(config-router)# exit
ospfd(config)# exit
```

# Komputer B (Router)

- Konfigurasi OSPF:

```
ospfd# show running-config

Current configuration:
!
hostname ospfd
password zebra
log stdout
!
!
!
interface eth0
!
interface eth0.67
!
interface lo
!
router ospf
 network 10.252.108.0/24 area 0.0.0.0
 network 192.168.2.0/24 area 0.0.0.0
!
line vty
!
end
```

# Komputer B (Router)

- Cek Route:

```
root@debian:/etc/quagga# route -n
Kernel IP routing table
Destination     Gateway         Genmask         Flags Metric Ref    Use Iface
0.0.0.0         10.252.108.1    0.0.0.0         UG    0      0        0 eth0
10.252.108.0    0.0.0.0         255.255.255.0   U     0      0        0 eth0
192.168.1.0     0.0.0.0         255.255.255.0   U     0      0        0 eth0.67
192.168.2.0     0.0.0.0         255.255.255.0   U     0      0        0 eth0.67
```

# Komputer B (Router)

- Cek Route:

```
root@debian:/etc/quagga# telnet localhost zebra
Trying ::1...
Connected to localhost.
Escape character is '^]'.

Hello, this is Quagga (version 0.99.23.1).
Copyright 1996-2005 Kunihiro Ishiguro, et al.


User Access Verification

Password:
Router> show ip route
Codes: K - kernel route, C - connected, S - static, R - RIP,
       O - OSPF, I - IS-IS, B - BGP, A - Babel,
       > - selected route, * - FIB route

K>* 0.0.0.0/0 via 10.252.108.1, eth0
O   10.252.108.0/24 [110/10] is directly connected, eth0, 00:01:48
C>* 10.252.108.0/24 is directly connected, eth0
C>* 127.0.0.0/8 is directly connected, lo
O   192.168.1.0/24 [110/20] via 10.252.108.141, eth0, 00:01:34
C>* 192.168.1.0/24 is directly connected, eth0.67
O   192.168.2.0/24 [110/10] is directly connected, eth0.67, 00:02:19
C>* 192.168.2.0/24 is directly connected, eth0.67
Router>
```

# Ujicoba PING

- PING dari semua komputer!

# TERIMA KASIH